Rotary Unions Type G®

KĀDANT

Coolant

MQL

Oil

Air Service

+ High speed rotating unions for trasferring fluids and air
+ Precision rotary unions for more effective cooling and lubrication
+ Engineered reliability for demanding applications

JOHNSON-FLUITEN

Advanced rotary unions for fluid service

Contents

G™ Rotary Union Overview ____ 3
GA ____ 4
GB ____ 5
GFR/GFRA ____ 6
GFL/GFLA ____ 7
GFS/GFSA ____ 8
GFP/GFPA ____ 9
GHR/GHRA ____ 10
GHS/GHSA ____ 11
GHP/GHPA ____ 12
G/50151 ____ 13
Spindle Mounted ____ 14
G/50318 ____ 15
Custom Unions ____ 16
Multi-Passage ____ 17
Multi-Purpose ____ 18
Recommendations ____ 19

Quick Select Chart

Type	Media				Pressure (Max.)		Temperature (Max.)		Speed (RPM)
	Coolant	Air	Oil	MQL	BAR	PSI	°C	°F	
GA	🟡	🟢	🟢	🟢	105	1.500	120	250	6.000
GB	🟢	🔴	🟢	🟢	400	5.800	90	195	1.500
GFR/GFRA	🟢	🟢 (1)	🟢	🟢	80	1.160	90	195	10.000
GFP/GFPA	🟢	🟢 (1)	🟢	🟢	150	2.175	90	195	15.000
GFL/GFLA	🟢	🟢	🟢	🟢	80	1.160	90	195	15.000
GFS/GFSA	🟢	🟢	🟢	🟢	80	1.160	90	195	20.000
GHP/GHPA	🟢	🟢	🟢	🟢	140	2.030	90	195	32.000
GHS/GHSA	🟢	🟢	🟢	🟢	80	1.160	90	195	42.000
G/50151	🟢	🟢	🟢	🟢	105	1.500	120	250	8.000
G2M/G4M/G5M	🔴	🟡 (1)	🟢	🟢	250	3.610	90	195	100
G2M019003818	🔴	🟢	🟢	🟢	250	3.610	90	195	100
G5007	🟢	🟢	🟢	🟢	70	1.000	120	250	5.000
Spindle Mounted	🟢	🟢 (1)	🟢	🟢	80	1.160	120	250	42.000(1)

- 🟢 Recommended
- 🟡 Acceptable
- 🔴 Not Recommended

1. Consult the factory for specific details. Depends on application parameters.
2. For specific application parameters, see catalogue page. Higher speed and pressure available on request.
3. Do not operate unions at a combination maximum values of pressure, temperature, and speed.

Overview

The G rotary union is a high performance, high precision union for coolant, air, and hydraulic oil applications. G unions are generally applied to the machine tool industry for:

- Transfer lines
- Gun drills
- Spindles
- Drilling
- Milling
- Rotary index tables
- Machine tools
- CNC machines
- Grinding machines
- Presses
- Clutches

Based on more than 70 years of mechanical seal design and application expertise, the G rotary union line is built to perform under the most demanding conditions. A thorough understanding of seal load optimisation, seal wear characteristics, and application knowledge means the G union can provide years of reliable service for coolant, water, air, and hydraulic oil applications.

Precision rotary unions designed for smooth running, high speed coolant, air, and hydraulic oil applications.

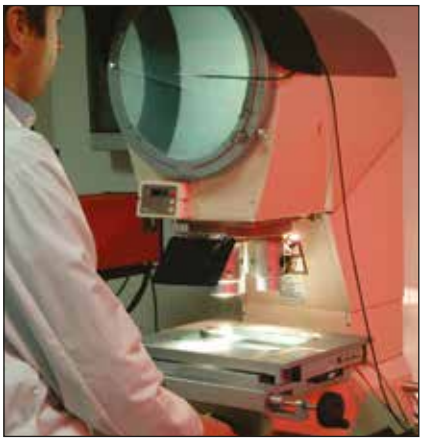

Measuring and controlling seal design ensures leak-free operation.

Rotor concentricity is measured to allow vibration-free operation.

Laser etched hydrodynamic grooves provide improved seal performance.

GA

GA

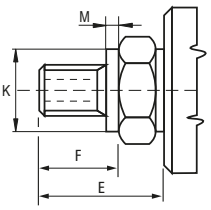

Rotor with pilot

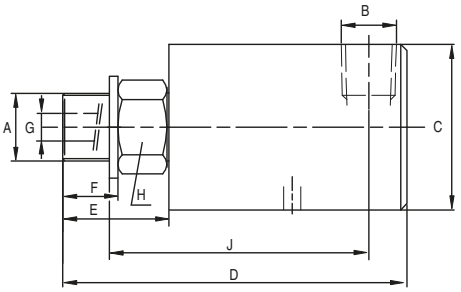

Type	A	B	C	D	E	F	G	H	J	K	M	Weight (Kg)
GA003002503	M10 X 1 RH	1/8" NPT	31	72	22	11	4	17	54	–	–	0,15
GA003002505	M10 X 1 RH	1/8" NPT	31	72	22	11	4	17	54	11 $^{0}_{-0,011}$	3	0,15
GA003002504	G 1/4" (BSP) RH	1/8" NPT	31	72	22	13	4	17	52	–	–	0,15
GA006015830	1/4" NPT RH	1/4" NPT	39	85	29	17	6,5	22	58	–	–	0,5
GA006000594	5/8" - 18 UNF RH	1/4" NPT	39	81	25	13	6,5	22	61	–	–	0,5
GA006003592	5/8" - 18 UNF LH	1/4" NPT	39	81	25	13	6,5	22	61	–	–	0,5
GA006002506	G 1/4" (BSP) RH	1/4" NPT	39	81	25	13	6,5	22	61	–	–	0,5
GA006002507	G 1/4" (BSP) LH	1/4" NPT	39	81	25	13	6,5	22	61	–	–	0,5
GA009015831	3/8" NPT RH	3/8" NPT	44	101	27	17	8,5	22	70,5	–	–	0,5
GA009002510	5/8" - 18 UNF RH	3/8" NPT	44	100	26	16	8,5	22	72,5	–	–	0,5
GA009003594	5/8" - 18 UNF LH	3/8" NPT	44	100	26	16	8,5	22	72,5	–	–	0,5
GA009000601	G 3/8" (BSP) RH	3/8" NPT	44	100	26	16	8,5	22	72,5	–	–	0,5
GA009003593	G 3/8" (BSP) LH	3/8" NPT	44	100	26	16	8,5	22	72,5	–	–	0,5
GA009001590	M16 X 2 RH	3/8" NPT	44	100	26	16	8,5	22	72,5	–	–	0,5
GA012015832	1/2" NPT RH	1/2" NPT	59	118	37	22	13	36	83	–	–	0,7
GA012001248	3/4" - 16 UNF RH	1/2" NPT	59	115	34	19	13	36	86	–	–	0,7
GA012003596	3/4" - 16 UNF LH	1/2" NPT	59	115	34	19	13	36	86	–	–	0,7
GA012002217	G 1/2" (BSP) RH	1/2" NPT	59	115	34	19	13	36	86	–	–	0,7
GA012003597	G 1/2" (BSP) LH	1/2" NPT	59	115	34	19	13	36	86	–	–	0,7
GA012002316	G 3/4" (BSP) RH	1/2" NPT	59	115	34	19	13	36	86	–	–	0,7
GA012003598	G 3/4" (BSP) LH	1/2" NPT	59	115	34	19	13	36	86	–	–	0,7
GA012003595	M20 X 1,5 RH	1/2" NPT	59	115	34	19	13	36	83	22 $^{-0,007}_{-0,020}$	5	0,7
GA012003599	M20 X 1,5 LH	1/2" NPT	59	115	34	19	13	36	83	22 $^{-0,007}_{-0,020}$	5	0,7
GA012002431	M22 X 1,5 RH	1/2" NPT	59	115	34	19	13	36	83	27 $^{-0,007}_{-0,020}$	3	0,7
GA012003600	M22 X 1,5 LH	1/2" NPT	59	115	34	19	13	36	83	27 $^{-0,007}_{-0,020}$	3	0,7

Consult factory for additional thread type.

Fluid	Pressure (BAR)	Temperature (°C)	RPM	RPM (with pilot)
Air	10	120	1.500	1.500
Coolant	70	120	3.500	6.000
Hydraulic Oil	105	120	3.500	6.000

Features and Benefits

- Precision ball bearings lubricated for life
- Hardened stainless steel rotor
- Optimised seal balance ratio for minimal friction
- Smooth running, no vibration
- Body available in anodised aluminium or brass
- Stationary seal face available in carbon graphite, bronze seal face for hydraulic oil above 70 bar

GB

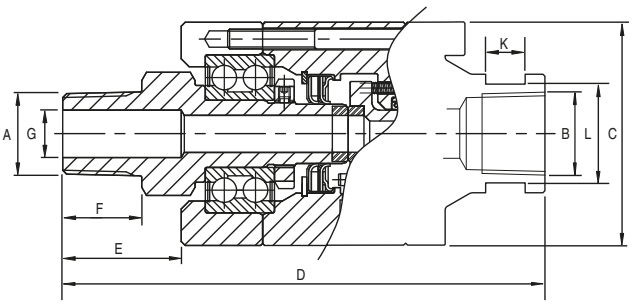

Type	A	B	C	D	E	F	G	K	L	Weight (Kg)
GB006018350	1/4" NPT RH	1/4" NPT	57	117	25	15	7	10	25	0,90
GB006018351	1/4" NPT LH	1/4" NPT	57	117	25	15	7	10	25	0,90
GB006018352	1/4" BSP RH	1/4" BSP	57	117	25	15	7	10	25	0,90
GB006018353	1/4" BSP LH	1/4" BSP	57	117	25	15	7	10	25	0,90
GB009018354	3/8" NPT RH	3/8" NPT	57	117	25	15	10	10	25	0,90
GB009018355	3/8" NPT LH	3/8" NPT	57	117	25	15	10	10	25	0,90
GB009018356	3/8" BSP RH	3/8" BSP	57	117	25	15	10	10	25	0,90
GB009018357	3/8" BSP LH	3/8" BSP	57	117	25	15	10	10	25	0,90
GB012018358	1/2" NPT RH	1/2" NPT	57	122	30	20	12	10	25	0,90
GB012018359	1/2" NPT LH	1/2" NPT	57	122	30	20	12	10	25	0,90
GB012018360	1/2" BSP RH	1/2" BSP	57	122	30	20	12	10	25	0,90
GB012018361	1/2" BSP LH	1/2" BSP	57	122	30	20	12	10	25	0,90

Fluid	Pressure (BAR)	Temperature (°C)	RPM
Water	400	90	1.500
Hydraulic Oil	400	90	1.500

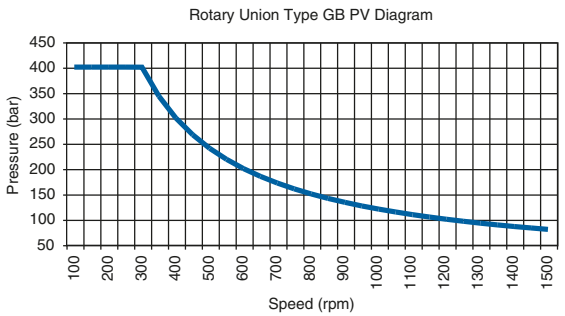

Features and Benefits

- Stainless steel rotor
- Labyrinth seal between bearing and mechanical seals for longer lifetime and safety
- Rigid bearing installation for safety
- Optimised seal balance for minimal friction
- Stainless steel and aluminium body
- All materials in contact with medium are non-corrosive

GFR/GFRA

Dry running

GFR

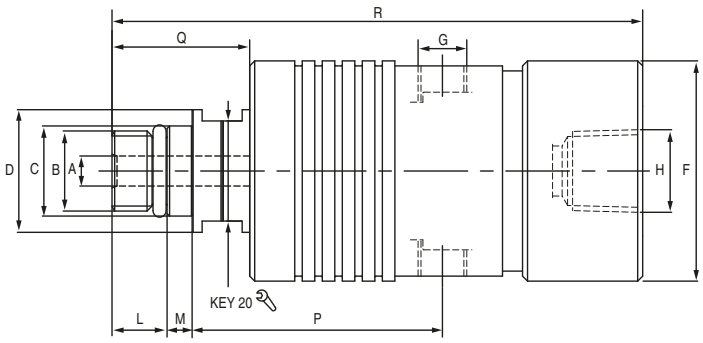

Type	A	B	C	D	F	G	H	L	M	P	Q	R	Weight (Kg)
GFR009030110	6	M16 X 1,5 LH	18g6	24,5	44	1/8" BSP	3/8" NPT	11	5	55,5	27	106,0	0,50
GFR009030111	6	5/8" 18 UNF LH	16,650/16,645	24,5	44	1/8" BSP	3/8" NPT	14	5	55,5	30	121,6	0,50

GFRA

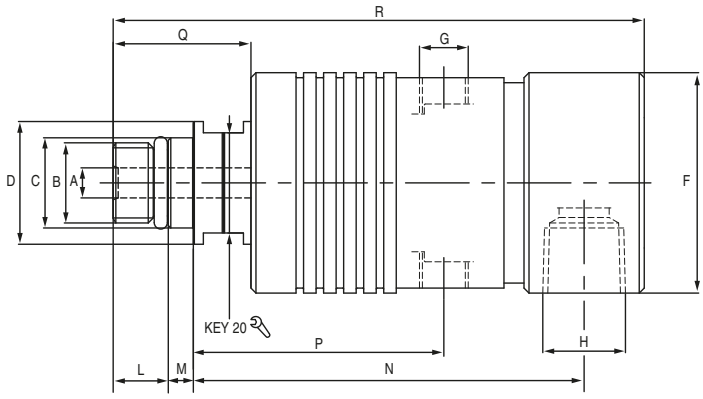

Type	A	B	C	D	F	G	H	L	M	N	P	Q	R	Weight (Kg)
GFRA009030120	6	M16 X 1,5 LH	18g6	24,5	44	1/8" NPT	3/8" NPT	11	5	70,0	50,0	27,5	106,0	0,50
GFRA009030121	6	5/8" 18 UNF LH	16,650/16,645	24,5	44	1/8" NPT	3/8" NPT	14	5	70,0	50,0	30,0	121,6	0,50
GFRA009030668	6	M14 X 1,5 LH	15g6	22,0	44	1/8" NPT	3/8" NPT	17	5	99,5	71,5	55,0	133,5	0,50
GFRA009029898	6	M12 X 1,25 LH	14g4	24,5	44	1/8" NPT	3/8" NPT	11	5	70,0	50,0	27,5	106,0	0,50

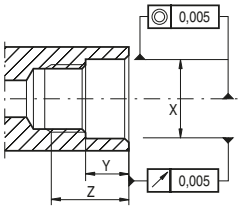

Spindle Detail
see installation instructions

Fluid	Pressure (BAR)	Temperature (°C)	RPM
Coolant	80	90	10.000
MQL	10	90	10.000
Air	8	50	10.000
Dry run	–	–	10.000

Rotary Union Type GFR-GFRA PV Diagram

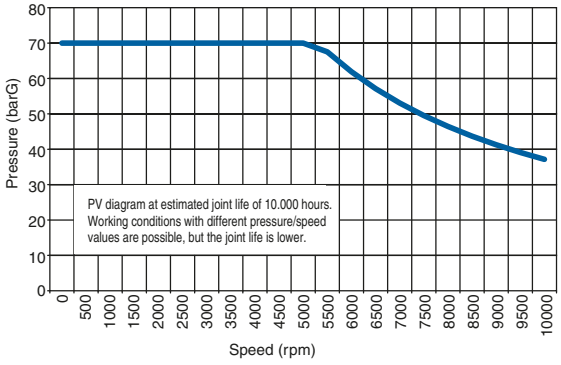

Features and Benefits

- Labyrinth seal and drain holes protect bearings
- Optimised seal balance ratio
- Silicon carbide seal faces resist wear and thermal shock
- Precision ball bearings eliminate vibration
- Anodised aluminium body
- Full flow area, minimal pressure drop
- Stainless steel spring located outside the flow
- Stainless steel rotor resists corrosion

GFL/GFLA
Dry running

GFL

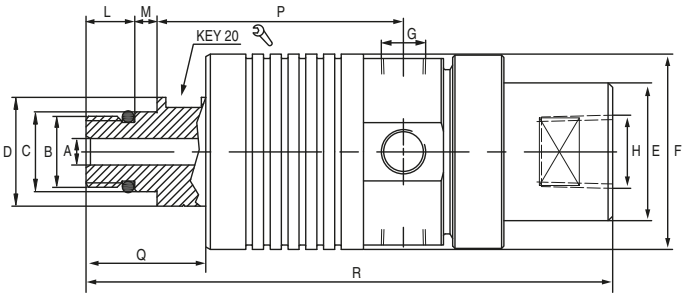

Type	A	B	C	D	E	F	G	H	L	M	P	Q	R	Weight (Kg)
GFL009028400	6	M16 X 1,5 LH	18g6	24,5	31	44	1/8" BSP	3/8" BSP	11	5	55,5	27	118,6	0,50
GFL009028401	6	5/8" - UNF LH	16,650/16,645	24,5	31	44	1/8" BSP	3/8" NPT	14	5	55,5	30	121,6	0,50
GFL009028402	6	M10 X 1,0 LH	11h6	24,5	31	44	1/8" BSP	3/8" BSP	13	3	55,5	27	118,6	0,50

GFLA

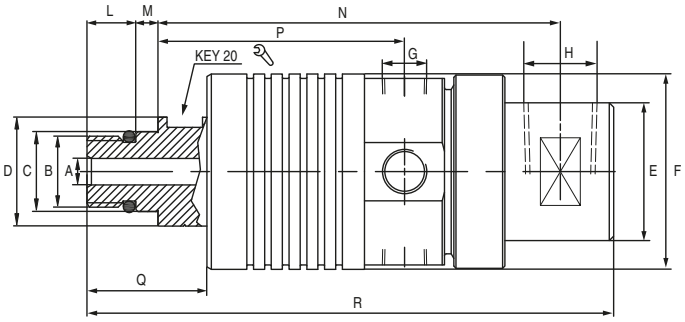

Type	A	B	C	D	E	F	G	H	L	M	N	P	Q	R	Weight (Kg)
GFLA009028405	6	M16 X 1,5 LH	18g6	24,5	31	44	1/8" BSP	3/8" BSP	11	5	90,6	55,5	27	118,6	0,50
GFLA009028406	6	5/8" - UNF LH	16,650/16,645	24,5	31	44	1/8" BSP	3/8" NPT	14	5	90,6	55,5	30	121,6	0,50
GFLA009028408	6	M16 X 1,5 RH	18g6	24,5	31	44	1/8" BSP	3/8" BSP	11	5	90,6	55,0	27	118,6	0,50

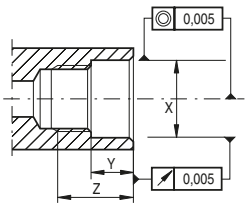

Spindle Detail
see installation instructions

Fluid	Pressure (BAR)	Temperature (°C)	RPM
Coolant	80	90	15.000
MQL	10	90	15.000
Air	8	50	15.000
Dry run	–	–	15.000

Rotary Union Type GFL-GFLA PV Diagram

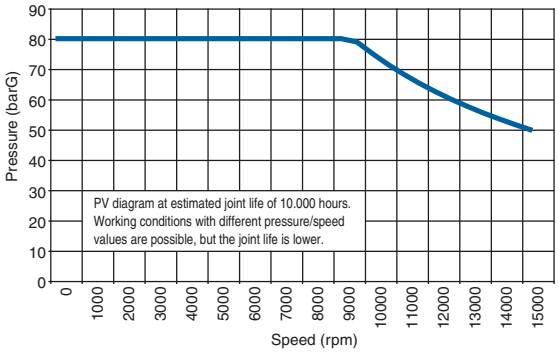

Features and Benefits

- Special seal design permits dry running
- Optimised seal balance ratio for minimal friction
- Precision angular contact bearings widely spaced to eliminate wobble and vibration
- Labyrinth seal and drain holes protect bearings
- Anodised aluminium body
- Reduced coolant misting for improved air quality
- Low heat generation in bearings and mechanical seal
- No leakage during tool change commutation
- Low vibration for precise machining
- Also available for rotation with compressed air
- Supplied with bearings run-in upon request
- Closing ring suitable for proximity sensing drawbar position

GFS/GFSA

Dry running

GFS

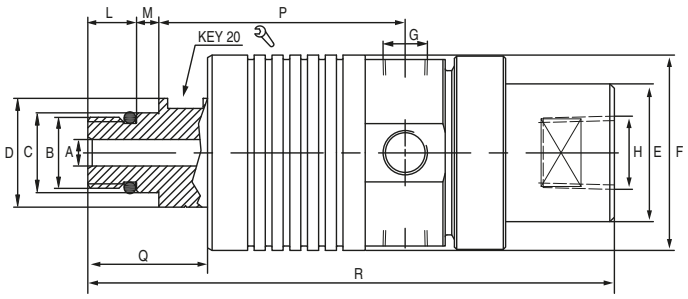

Type	A	B	C	D	E	F	G	H	L	M	P	Q	R	Weight (Kg)
GFS009028410	6	M16 X 1,5 LH	18g6	24,5	31	44	1/8" BSP	3/8" BSP	11	5	55,5	27	118,1	0,50
GFS009028411	6	5/8" - UNF LH	16,650/16,645	24,5	31	44	1/8" BSP	3/8" BSP	14	5	55,5	30	121,1	0,50

GFSA

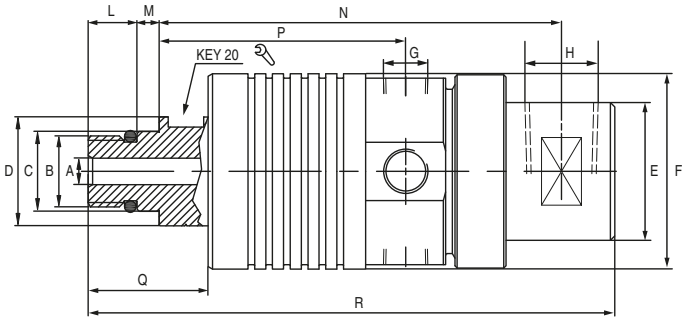

Type	A	B	C	D	E	F	G	H	L	M	N	P	Q	R	Weight (Kg)
GFSA009028415	6	M16 X 1,5 LH	18g6	24,5	31	44	1/8" BSP	3/8" BSP	11	5	90,1	55,5	27	118,1	0,50
GFSA009028416	6	5/8" - UNF LH	16,650/16,645	24,5	31	44	1/8" BSP	3/8" BSP	14	5	90,1	55,5	30	121,1	0,50

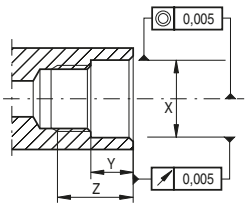

Spindle Detail
see installation instructions

Fluid	Pressure (BAR)	Temperature (°C)	RPM
Coolant	80	90	20.000
MQL	10	90	20.000
Air	8	50	20.000
Dry run	–	–	20.000

Rotary Union Type GFS-GFSA PV Diagram

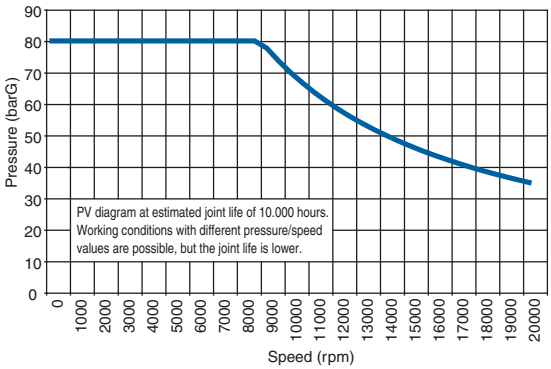

Features and Benefits

- Special seal design permits dry running
- Optimised seal balance ratio for minimal friction
- High precision angular contact bearings eliminate wobble and vibration
- Labyrinth seal and drain holes protect bearings
- Anodised aluminium body
- High speed, dry run applications
- Reduced coolant misting for improved air quality
- Low heat generation in bearings and mechanical seal
- No leakage during tool change commutation
- Low vibration for precise machining
- Also available for rotation with compressed air
- Supplied with bearings run-in upon request
- Closing ring suitable for proximity sensing drawbar position

GFP/GFPA
Dry running

GFP

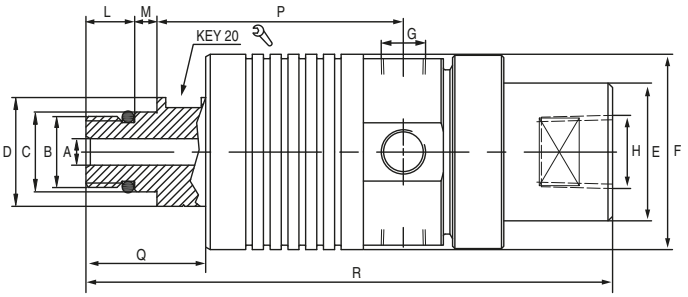

Type	A	B	C	D	E	F	G	H	L	M	P	Q	R	Weight (Kg)
GFP009	6	M16 X 1,5 LH	18g6	24,5	31	44	1/8" BSP	3/8" BSP	11	5	55,5	27	118,6	0,50
GFP009047310	6	5/8" - UNF LH	16,650/16,645	24,5	31	44	1/8" BSP	3/8" BSP	14	5	55,5	30	121,6	0,50

GFPA

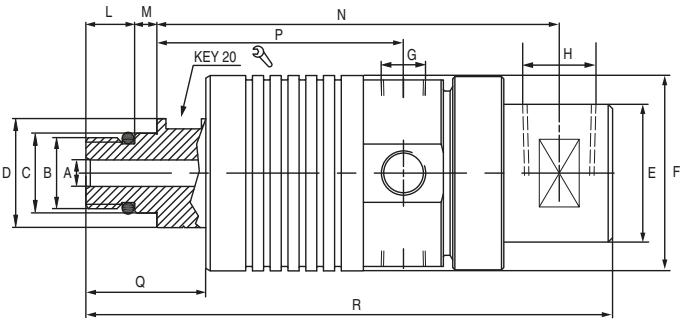

Type	A	B	C	D	E	F	G	H	L	M	N	P	Q	R	Weight (Kg)
GFPA009033396	6	M16 X 1,5 LH	18g6	24,5	31	44	1/8" BSP	3/8" BSP	11	5	90,6	55,5	27	118,6	0,50
GFPA009031188	6	5/8" - UNF LH	16,650/16,645	24,5	31	44	1/8" BSP	3/8" BSP	14	5	90,6	55,5	30	121,6	0,50

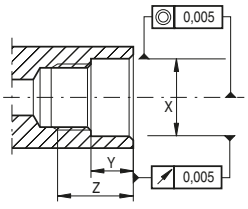

Spindle Detail
see installation instructions

Fluid	Pressure (BAR)	Temperature (°C)	RPM
Coolant	150	90	15.000
MQL	10	90	15.000
Air	8	50	15.000
Dry run	–	–	15.000

Rotary Union Type GFP–GFPA PV Diagram

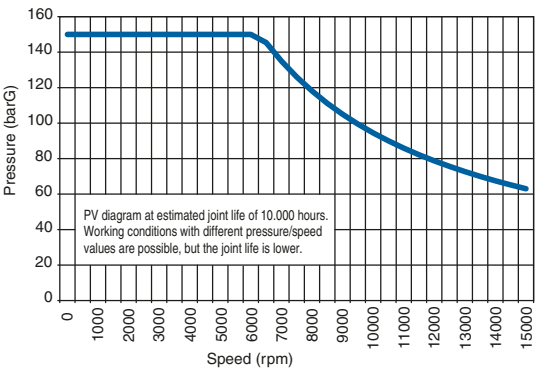

Features and Benefits

- Labyrinth seal and drain holes protect bearings
- Optimised seal balance ratio
- Silicon carbide seal faces resist wear and thermal shock
- Angular ball bearing design resists side loading
- Low vibration for precise machining
- Anodised aluminium body
- Full flow area, minimal pressure drop
- Multiple stainless steel springs located outside the flow
- Stainless steel rotor resists corrosion
- Closing ring suitable for proximity sensing drawbar position

GHR/GHRA

Dry running

GHR

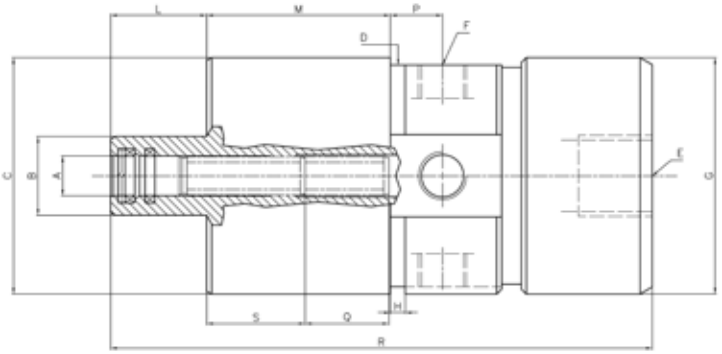

Type	A	B	C	D	E	F	G	H	L	M	P	Q	R	S	Weigh (Kg)
GHR009038611	8g6	16	48/h7	45	3/8"BSP	1/4"BSP	48	3	19,5	37,3	10,6	17	110	20	0,6

GHRA

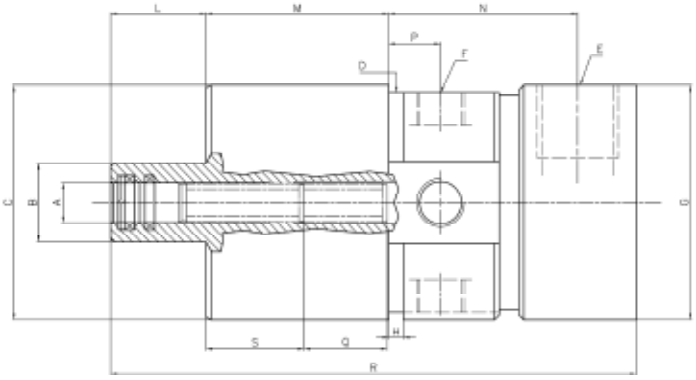

Type	A	B	C	D	E	F	G	H	L	M	N	P	Q	R	S	Weigh (Kg)
GHRA009036867	8g6	16	48/h7	45	3/8"BSP	1/4"BSP	48	3	19,5	37,3	38,6	10,6	17	107,4	20	0,6

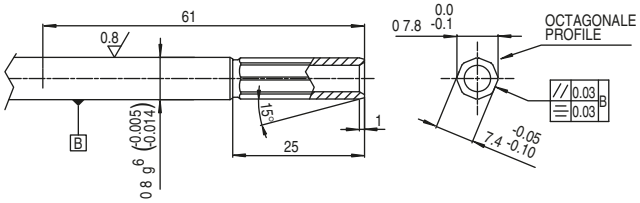

Fluid	Pressure (BAR)	Temperature (°C)	RPM
Coolant	80	90	16.000
MQL	10	90	16.000
Air	8	50	16.000
Dry run	–	–	16.000

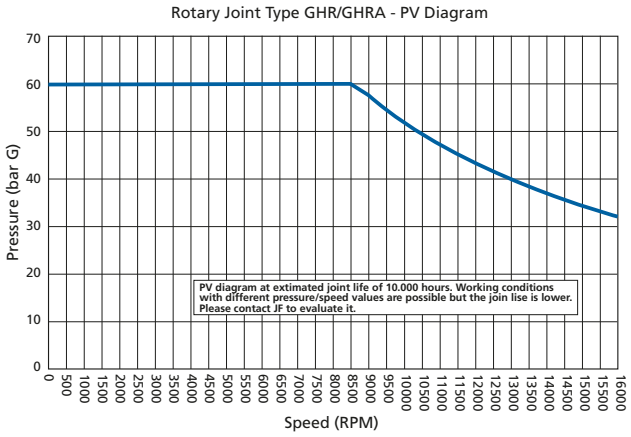

Features and Benefits

- Special seal design permits dry running
- Labyrinth seal and drain holes protect bearings
- Optimize seal balance ratio for minimal friction
- Anodized aluminium body
- Full flow area, minimal pressure drop
- Stainless steel rotor resist corrosion
- Long drawbar stroke for maximum flexibility
- No leakage during tool change commutation
- Large drain holes to evacuate coolant from the union
- Supplied with bearings run-in upon request
- Stainless steel springs located outside the flow

GHS/GHSA
Dry running

GHS

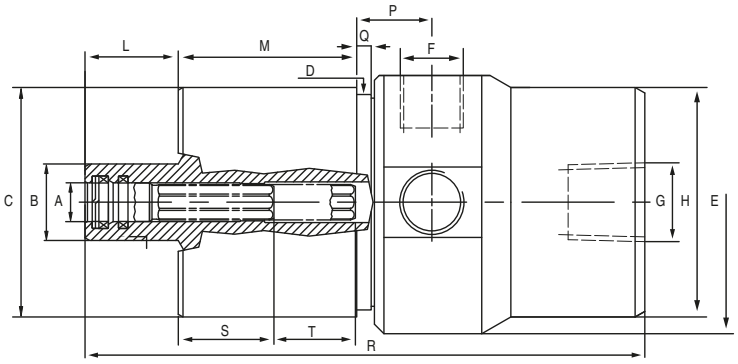

Type	A	B	C	D	E	F	G	H	L	M	P	Q	R	S	T	Weight (Kg)
GHS009039625	8g6	16	48/h7	45	55	1/4″ BSP	3/8″ BSP	48	19,5	37,3	15,7	3	117	20	17	0,60

GHSA

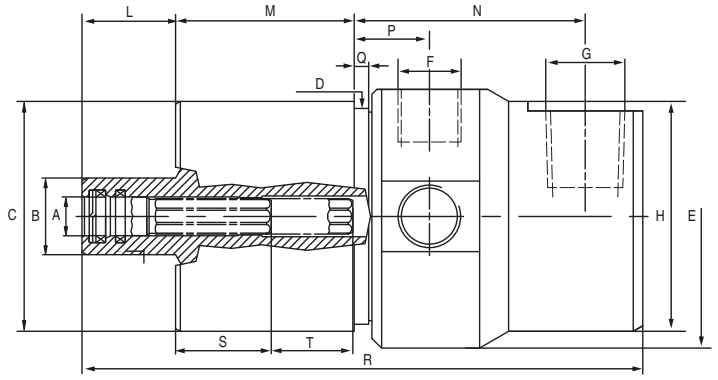

Type	A	B	C	D	E	F	G	H	L	M	N	P	Q	R	S	T	Weight (Kg)
GHSA009039626	8g6	16	48/h7	45	55	1/4″ BSP	3/8″ BSP	48	19,5	37,3	48,2	15,7	3	117	20	17	0,60

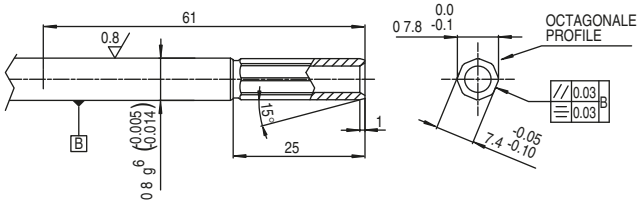

Fluid	Pressure (BAR)	Temperature (°C)	RPM
Coolant	80	90	32/42.000*
MQL	10	90	32/42.000*
Air	8	50	32/42.000*
Dry run	–	–	32/42.000*

*High Speed 42.000 RPM with ceramic bearings

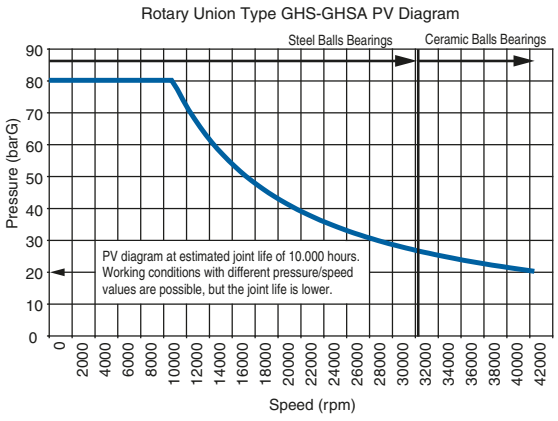

Features and Benefits

- Special seal design permits dry running
- Labyrinth seal and drain holes protect bearings
- Optimised seal balance ratio
- High precision angular contact bearings for high speeds
- Anodised aluminium body
- Full flow area, minimal pressure drop
- Long drawbar stroke for maximum flexibility
- Seal to protect bearings for air pressure in rotor area
- Low heat generation in bearings and mechanical seal
- No leakage during tool change commutation
- Large drain holes to evacuate coolant from the union
- Supplied with bearings run-in upon request

GHP/GHPA

Dry running

GHP

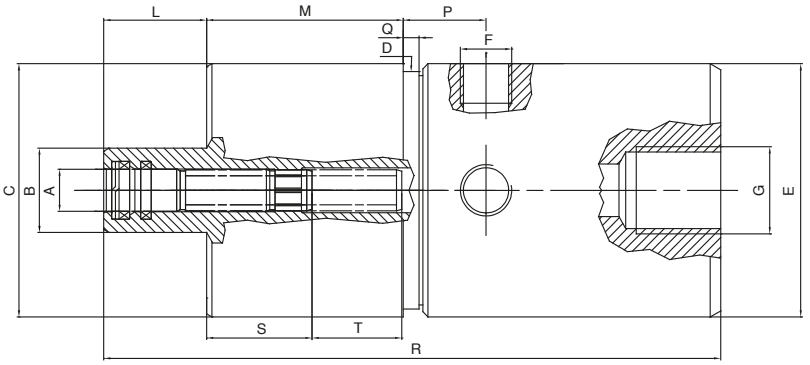

Type	A	B	C	D	E	F	G	H	L	M	P	Q	R	S	T	Weight (Kg)
GHP009033365	8g6	16	48/h7	45	55	1/4″ BSP	3/8″ BSP	48	19,5	37,3	15,7	3	117	20	17	0,60

GHPA

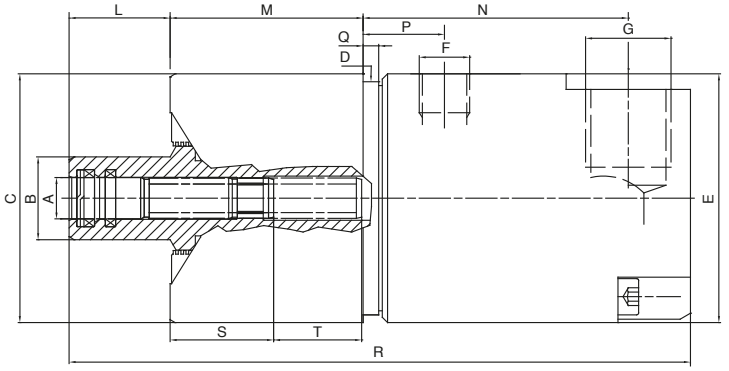

Type	A	B	C	D	E	F	G	H	L	M	N	P	Q	R	S	T	Weight (Kg)
GHPA009042838	8g6	16	48/h7	45	55	1/4″ BSP	3/8″ BSP	48	19,5	37,3	48,2	15,7	3	117	20	17	0,60

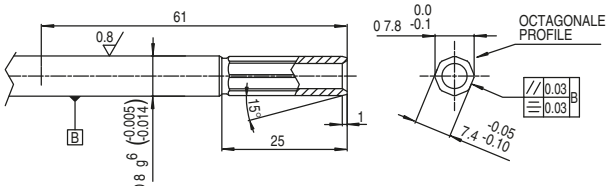

Fluid	Pressure (BAR)	Temperature (°C)	RPM
Coolant	150	90	24/32.000
MQL	10	90	24/32.000
Air	8	50	24/32.000
Dry run	–	–	24/32.000

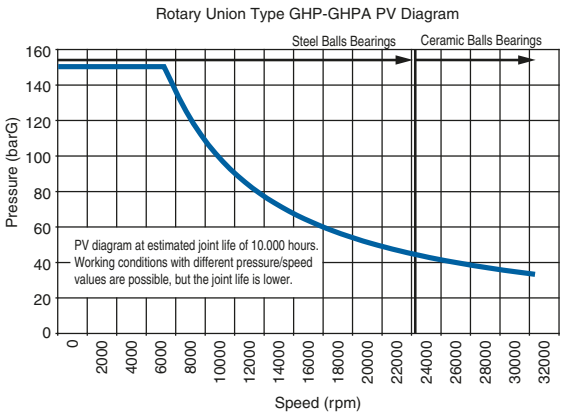

Features and Benefits

- Special seal design permits dry running
- Labyrinth seal and drain holes protect bearings
- Optimised seal balance ratio
- High precision angular contact bearings for high speeds
- Anodised aluminium body
- Full flow area, minimal pressure drop
- Long drawbar stroke for maximum flexibility
- Low heat generation in bearings and mechanical seal
- No leakage during tool change commutation
- Large drain holes to evacuate coolant from the union
- Supplied with bearings run-in upon request

G/50151

G/50151

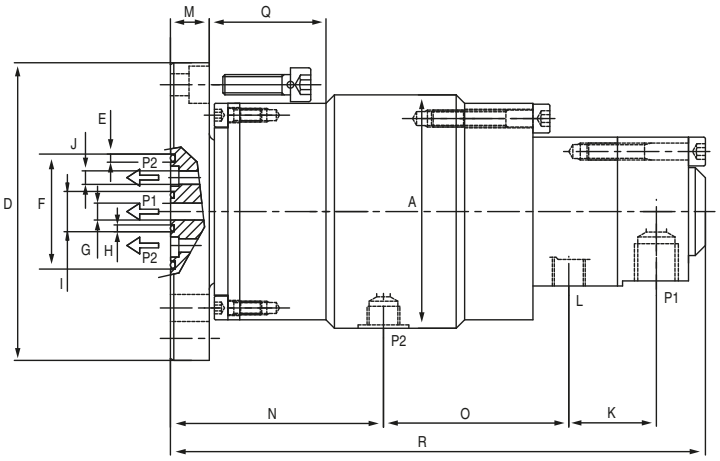

A	D	E	F	G	H	I	J	K	L	M	N	O	P1	P2	Q	R
69	88g6	2,4	34	5	2	11,9	4	25,9	1/8" BSP	11,5	63	54,8	1/4" BSP	1/8" BSP	34,5	158,2

		P1			P2		
	Maximum RPM	Media	Maximum Pressure (bar)	Filtering (micron)	Media	Maximum Pressure (bar)	Filtering (micron)
G/50151/0000	8000	Coolant	20	60	Coolant	20	60
		Hydraulic Oil	80	10	Hydraulic Oil	80	10
G/50151/0001	8000	Coolant	20	60	Air	10	20
		Hydraulic Oil	80	10			
		Air	10	20			

Features and Benefits

- Two channel rotary union
- High speed for specific machine tool applications
- Dry running capable (consult factory)
- Aluminium body
- Stainless steel rotor
- Flanged connection for stable operation and long life
- Drain connection between passages for separation of media
- Also available for rotation with compressed air

Spindle Mounted

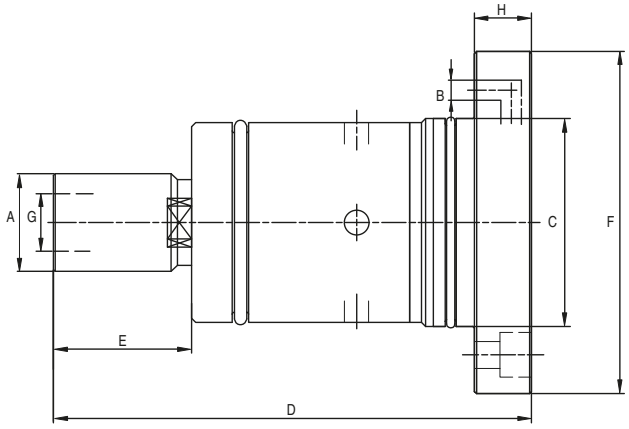

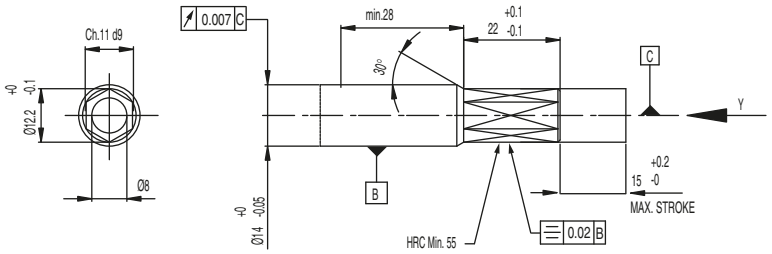

Type	A	B	C	D	E	F	G	H
G/5869	24	5	51 f7	117,5	34	84	14,1 H7	14

Type	Pressure (BAR)	Temperature (°C)	RPM
G/5869	70	90	18.000

Rotary Union Type G/5327 PV Diagram

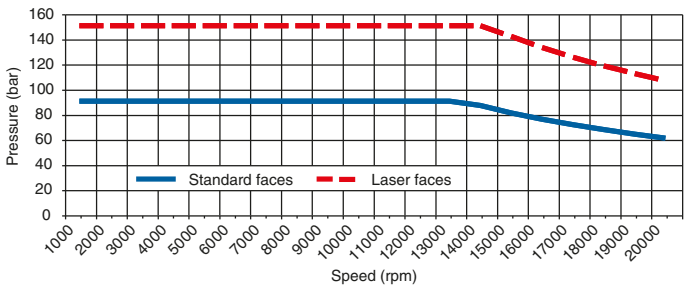

Features and Benefits

- Auto-Off™ seal device permits dry running
- Precision bearing for long lifetime
- Tungsten carbide seal faces resist wear and thermal shock
- Drawbar stroke 15 mm
- Coolant connection in flange for reduced hose load
- Anodised aluminium body

G/50318
Bearingless union

G/50318

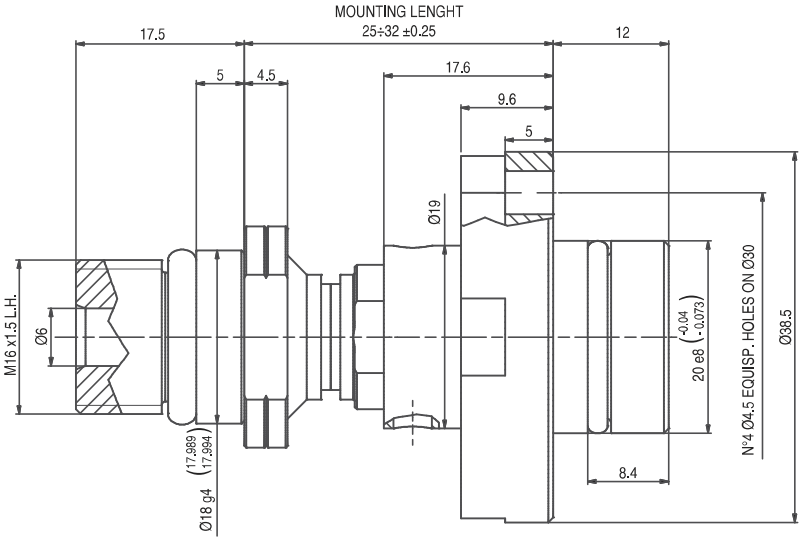

Operating conditions:

- Speed = 30000 rpm
- Pressure = 140 Bar
- MQL = possible
- Dry running = possible
- Dry running with air in pressure = possible
- No leak during switching of operating conditions:
  - From coolant to MQL & from MQL to coolant
  - From coolant dry running & from dry running to coolant
  - From MQL to dry running & from dry running to coolant
- Laser lift technology = long life time

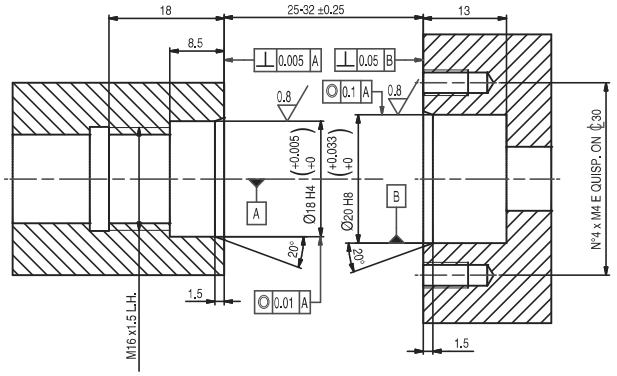

Features and Benefits

- High-speed bearingless coolant union
- External spindle supported
- Laser lift technology
- Silicon carbide/carbon grafite seals
- Stub rotor mounted directly onto the spindle end compact, precision design for installation flexibility
- Seal faces alway in contact to avoid leakage during change of operations. Better protection for the spindle motor

Custom Unions

Custom designed unions from Johnson-Fluiten are available in both housing-less and housed versions. When the rotary union you require is not shown in the catalogue, Johnson-Fluiten's team of engineers are ready to design and manufacture a custom union for your specific application.

Figure 1

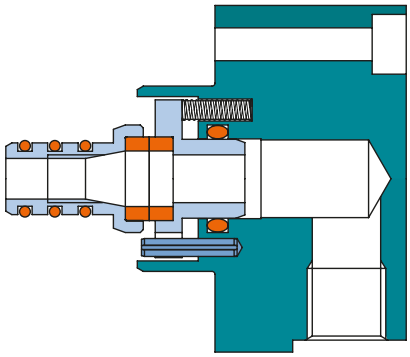

Figure 2

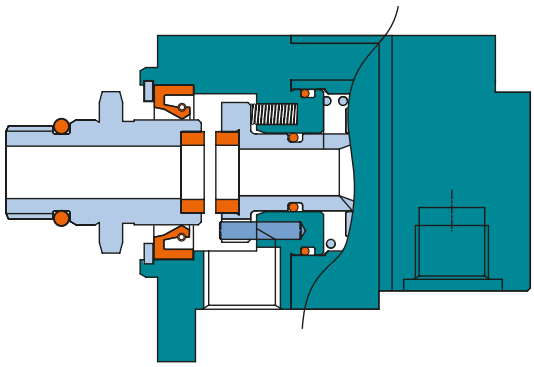

Figure 3

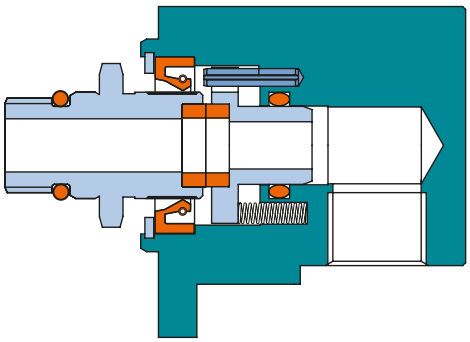

Figure 4

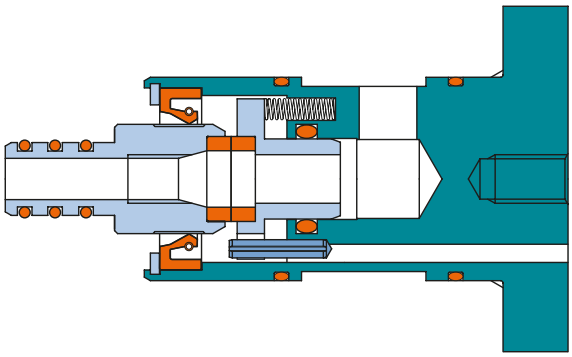

Figure 5

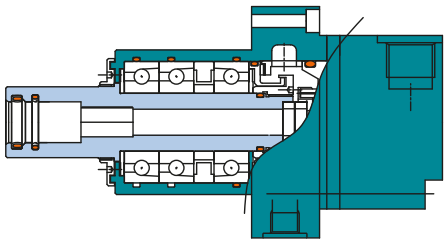

Figure 6

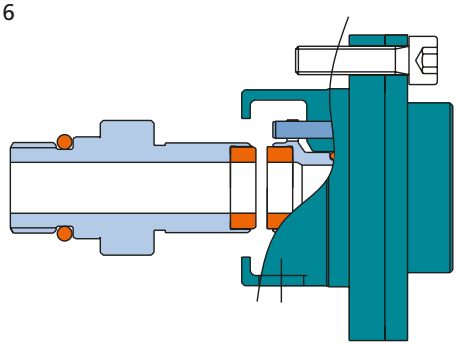

Custom-designed precision unions are available with laser-etched hydrodynamic grooves to provide improved seal life.

Multi-Passage

G2M

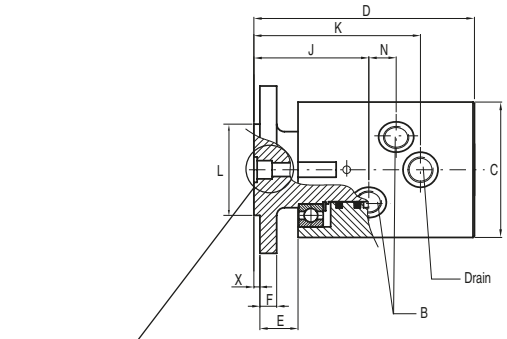

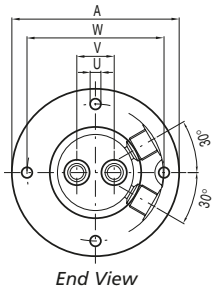

End View

G4M

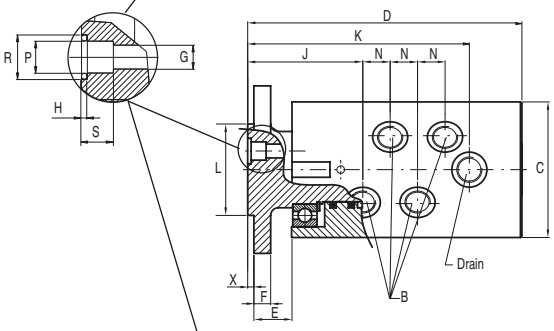

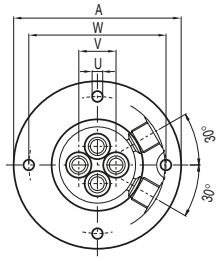

End View

G5M

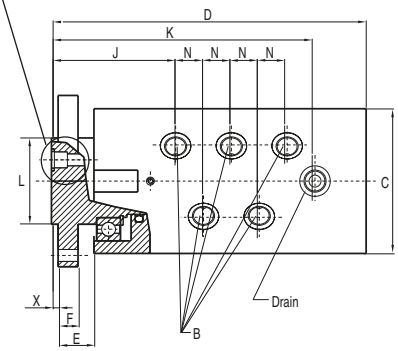

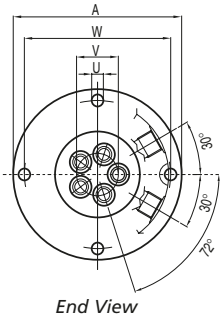

End View

Type	A	B	C	D	E	F	G	H	J	K	L*	N	P	R	S	U	V	W	X
G2M009001494	110	3/8″ BSP	89	145	25	11	9	2	76	110	60	18	12	17	12	7	25	90	4
G2M012002385	130	1/2″ BSP	108	158	25	14	12	2	81	123	75	23	15	20	15	9	29	110	4
G4M009001454	110	3/8″ BSP	89	180	25	11	9	2	76	146	60	18	12	17	12	7	25	90	4
G4M012003608	130	1/2″ BSP	108	202	25	14	12	2	81	169	75	23	15	20	15	9	29	110	4
G5M009015044	129	3/8″ BSP	109	237	27	15	9	2	94	199	65	21	12	17	12	9	32	112	5

Inter-passage leakage may occur, check compatibility of different fluids.

** L tolerance = h6*

Fluid	Pressure (BAR)	Temperature (°C)	RPM
Air	10	90	100
Hydraulic Oil	60	90	100
	250	90	10

Features and Benefits

- Multi-passage rotary unions for air and oil
- Precision ball bearings are lubricated for life
- Proprietary “slide” seal provides long life and dry-running
- Heat-treated (hardened) stainless steel rotor
- Drain holes can be connected to a drain line
- Designed for multi-station index tables

Multi-Purpose

G2M019003818

Fluid	Pressure (BAR)	Temperature (°C)	RPM
Air	10	90	100
Hydraulic Oil	60	90	100
	250	90	10

Inter-passage leakage may occur, check compatibility of different fluids.

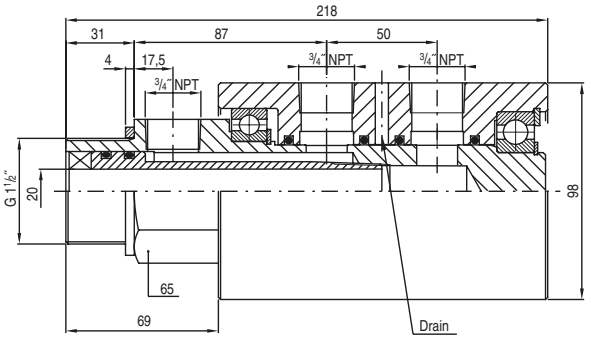

Features and Benefits

- Two-passage rotary union for air and oil
- Precision ball bearings are lubricated for life
- Heat-treated (hardened) stainless steel rotor
- Drain holes can be connected to a drain line
- Anodised aluminium body

G/5007/0004

Fluid	Pressure (BAR)	Temperature (°C)	RPM
Air	10	120	5.000
Hydraulic Oil	70	120	5.000

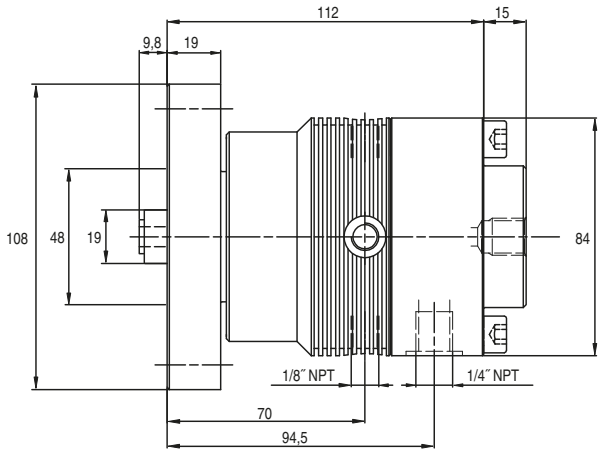

Features and Benefits

- High-speed two-passage rotary union for air, hydraulic oil, and coolant
- Unique seal design prevents "accidental" leakage when both passages are pressurised
- Mechanical seal provides long life and positive sealing
- High precision ball bearings are lubricated for life
- Heat-treated (hardened) stainless steel rotor
- Drain holes can be connected to a drain line

Recommendations

Installation and operation recommendations
G rotary unions are high-precision components that provide smooth running operation at high speeds. Due to the precise manufacturing tolerances, these unions require care during installation and maintenance.

Installation instructions are available online at www.coolantunion.com or from your local Kadant Johnson sales office.

Flexible hose
To ensure free movement of the union and elimination of side loading, the proper installation, type, and length of flexible hose should be used. Kadant Johnson recommends SAE 100R1 Type AT single-braid hose. The minimum length of hose is 300 mm for a one-piece installation.

Hose should be a minimum of 300 mm long.

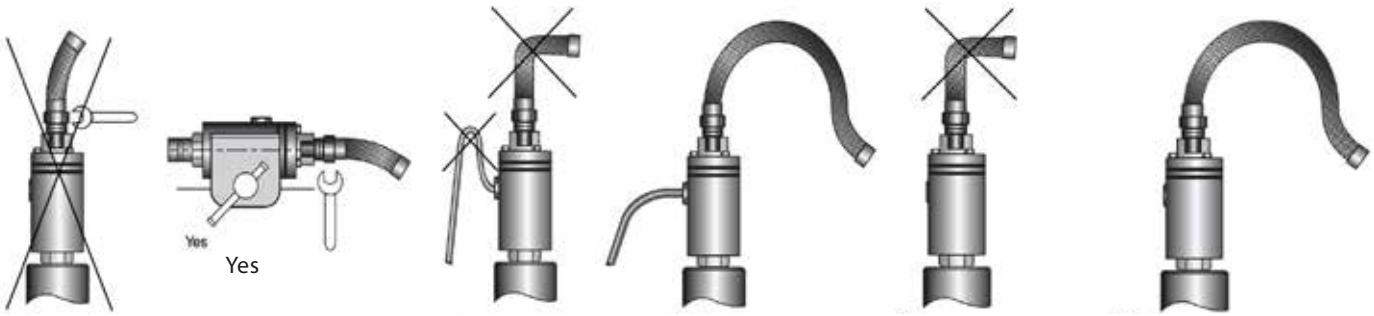

No Yes No Yes No Yes

Lubrication
The seal faces in all G rotary unions are lubricated by the media (coolant, hydraulic oil, etc.) passing through the union.
All ball bearings are lubricated for life and require no additional lubrication.

Filtration
The service life of the seal and the perfect operation of the rotating union is largely determined by filter quality: we recommend a filtering of 50 µm and a media purity of ISO 4406 – 17/15/12.

Guarantee
G unions are tested prior to shipment and are warranted against manufacturing defects for 12 months. Kadant Johnson's global sales and service network stands behind its products and provides support to more than 150 countries worldwide.

Global Assistance On A Worldwide Basis

Many suppliers have made a commitment to the international marketplace. But few have taken that commitment far as Kadant Johnson. To assure product availability wherever it's needed, Kadant Johnson joints, syphons, and related equipment are manufactured in North America, Europe, South America, and Asia.
Because knowledgeable advice and prompt service are as important as the products, Kadant Johnson has factory-authorised representatives in nearly one hundred and fifty countries.
So no matter where you are, Kadant Johnson products, service, and assistance are nearby.

MANUFACTURING LOCATIONS

805 Wood Street
Three Rivers, MI 49093 USA
tel: +1 269 278 1715
fax: +1 269 279 5980

Nijverheidslaan 23-25
1380 AB Weesp, The Netherlands
tel: +31 294 494200
fax: +31 294 431359

Via Anhanguera, Km 83,5 - CP 351/353
13278-530, Valinhos, SP, Brazil
tel: +55 19 3849 8700
fax: +55 19 3871 0093

Wuxi National Hi-Tech
Industrial Development Zone
Wuxi City, Jiangsu Province, China
tel: +86 510 85212218
fax: +86 510 85212038

JOHNSON - FLUITEN srl
Via Newton, 21
20016 Pero, Milano (Italy)
tel: +39 02 3394091
fax: +39 02 33940950
www.johnson-fluiten.com

KĀDANT

Kadant is a global supplier of high-value, critical components and engineered system used in process industries worlwide.

Contact us:

JOHNSON-FLUITEN srl
Via Newton, 21
20016 Pero (MI) Italia

Tel.: +39-023394091
www.johnson-fluiten.com
Email: info-jf@johnson-fluiten.com

G-3008 (BR EN) 2020
Replaces: G-3007 (BR EN)
© 2020 Kadant Inc.