CONNECTIONS		OPERATING CONDITIONS	
P1	G 1/4" ISO 228/1	MAX. SPEED	1500 rpm
P2	G 1/4" ISO 228/1	MEDIA	AIR**/HYDRAULIC OIL
D	3 x G 1/8" ISO 228/1	MAX. PRESSURE	10**bar/70bar
		MAX. TEMPERATURE	90 °C

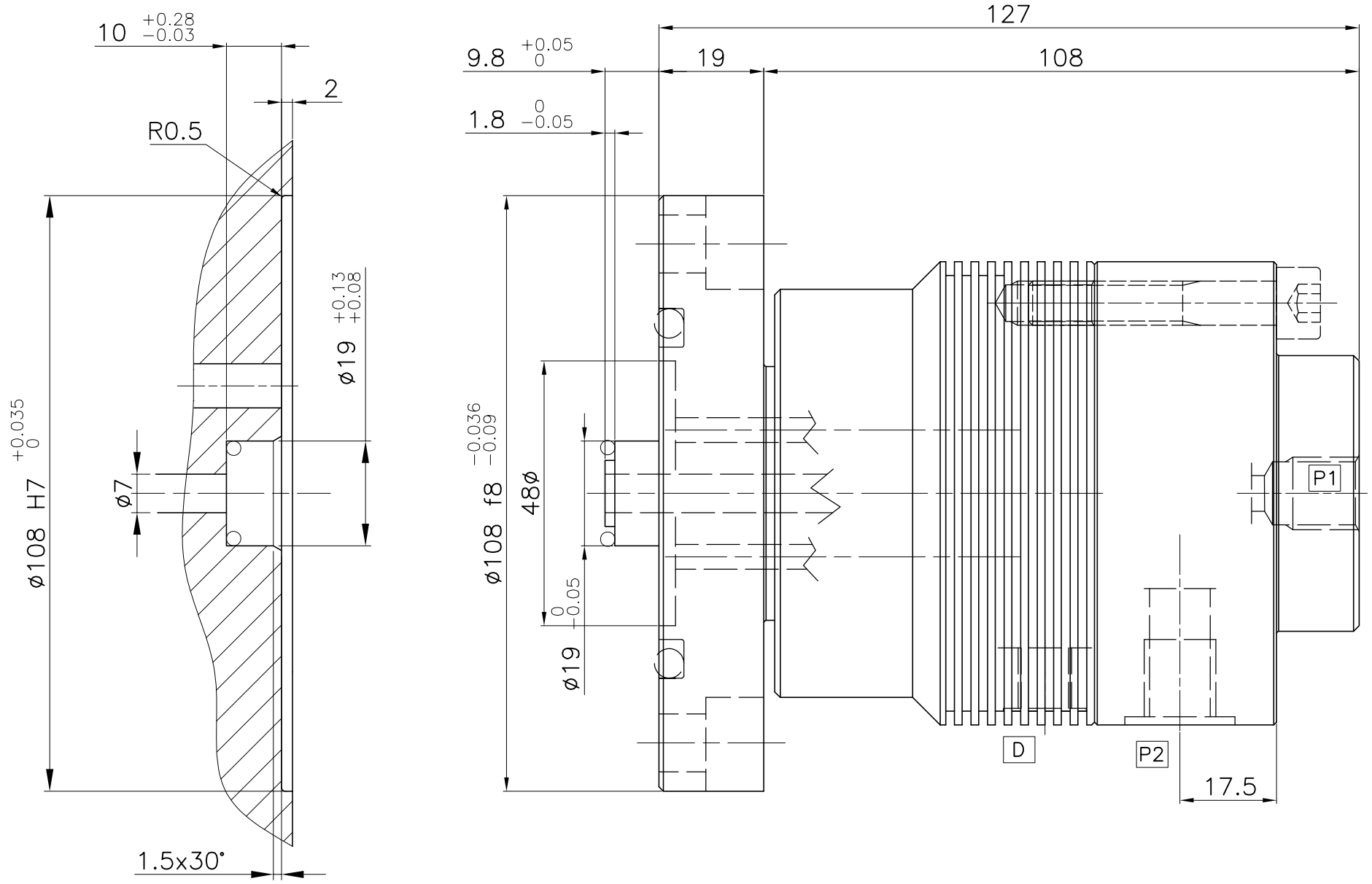

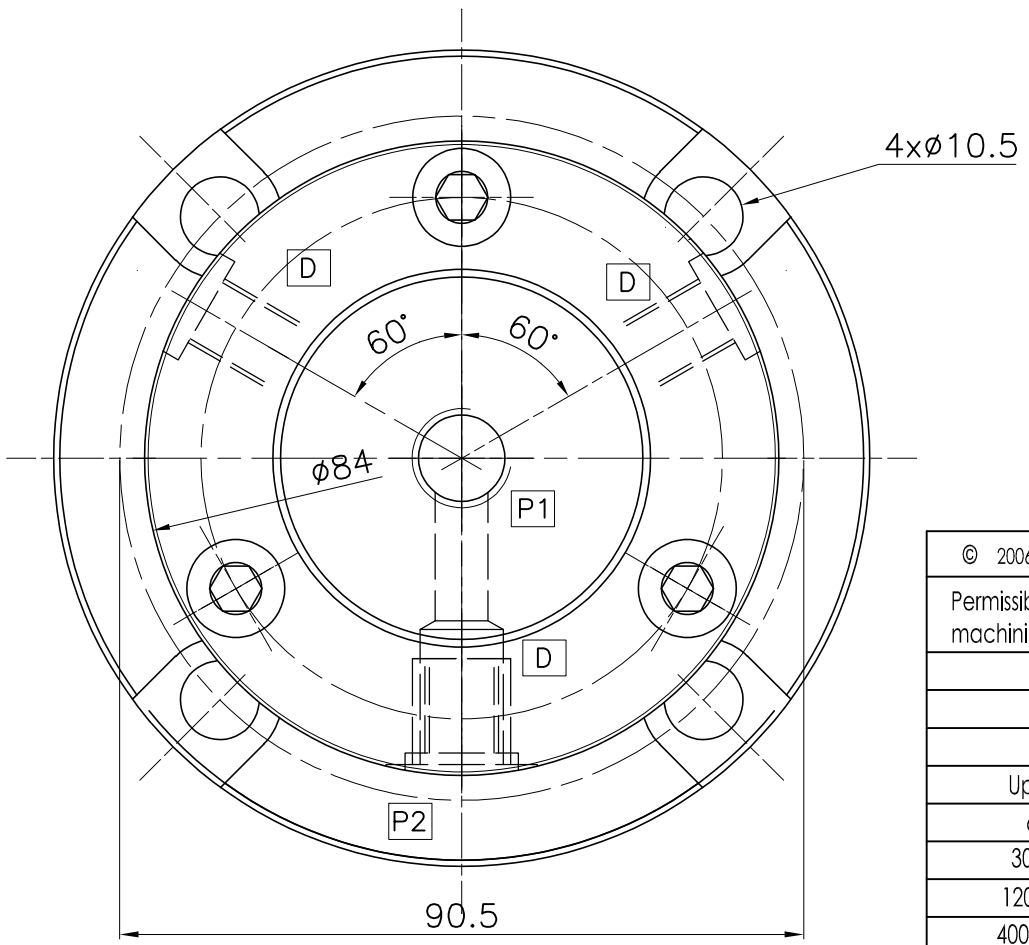

© 2006 PROPERTY OF JOHNSON-FLUITEN Srl THE DRAWING AND ITS INFORMATION ARE CONFIDENTIAL AND MUST BE RETURNED IF REQUESTED BY JOHNSON-FLUITEN Srl.

Permissible deviations on untoleranced machining dimensions as below

ISO 2768-m Tolerance	
mm	± mm
Up to 6	0.1
6-30	0.2
30-120	0.3
120-400	0.5
400-1000	0.8
1000-2000	1.2
2000-4000	2

PATTERN NO:

REFERENCE DRAWING:

TREATMENT:

ANGULAR TOLERANCE: ± 0°30'

REQUEST NO:

LOCATION: 243

MATERIAL:

:N. AMERICA
:EUROPE
:ASIA
:S. AMERICA

DEBURR:

DRAWN BY: Turnu-I

CHECKED BY: Landone-M

DATE: 21/04/2023

PROJECTION:

TITLE: ROTARY JOINT TYPE G/5007/0004 ASSEMBLY

JOHNSON-FLUITEN
www.johnson-fluiten.com

ARTICLE NO: G/5007/0004

SCALE:	PAGE:	DRAWING NO:	REV:
1:1	OF:	F5007G50070004	

V1.2