Type GFP/GFPA

JOHNSON-FLUITEN

Fluid	PSI (BAR)	Temperature °F (°C)	RPM
Coolant	2,175 (150)	195 (90)	15,000
MQL	145 (10)	195 (90)	15,000
Air	116 (8)	122 (50)	15,000
Dry Run	-	-	15,000

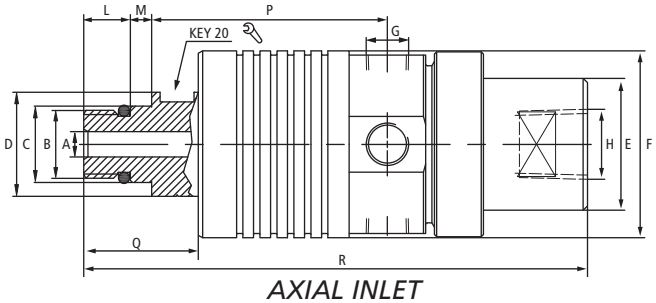

AXIAL INLET

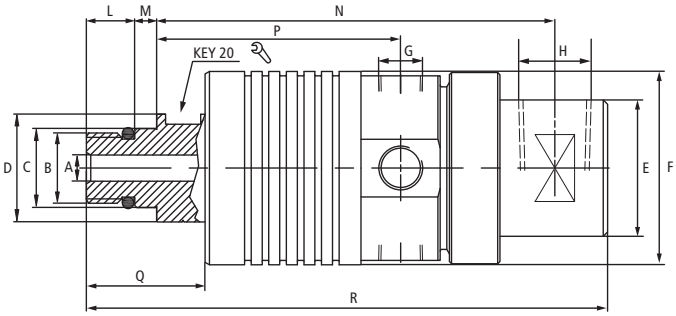

RADIAL INLET

Type	A	B	C	D	E	F	G	H	L	M	P	Q	R	Weight Lb (Kg)
GFP009	6	M16 X 1.5 LH	18 g6	24.5	31	44	1/8" NPT	3/8" BSP	11	5	55.5	27	118.6	1.1 (0.50)
GFP009047310	6	5/8" - UNF LH	16.65 h4	24.5	31	44	1/8" NPT	3/8" BSP	14	5	55.5	30	121.6	1.1 (0.50)

Type	A	B	C	D	E	F	G	H	L	M	N	P	Q	R	Weight Lb (Kg)
GFPA009033396	6	M16 X 1.5 LH	18 g6	24.5	31	44	1/8" NPT	3/8" BSP	11	5	90.6	55.5	27	118.6	1.1 (0.50)
GFPA009031188	6	5/8" - UNF LH	16.65 h4	24.5	31	44	1/8" NPT	3/8" BSP	14	5	90.6	55.5	30	121.6	1.1 (0.50)

Dimensions in millimeters. For reference only and subject to change.

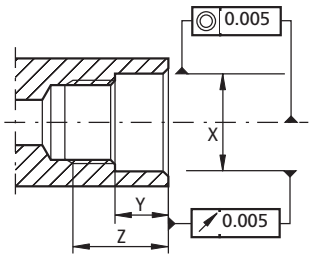

See page 18 for spindle detail

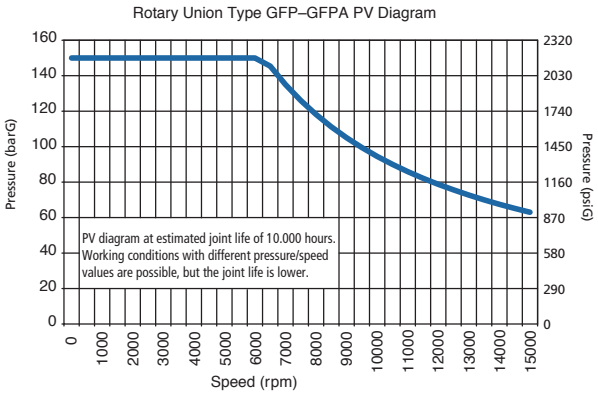

INSTALLATION INSTRUCTIONS

Overview

- Labyrinth seal and drain holes protect bearing
- Optimised seal balance ratio
- Silicon carbide seal faces resist wear and thermal shock
- Angular ball bearing design resists side loading
- Low vibration for precise machining
- Anodised aluminium body
- Full flow area, minimal pressure drop
- Multiple stainless steel springs located outside the flow
- Stainless steel rotor resists corrosion
- Closing ring suitable for proximity sensing draw bar position

JOHNSON-FLUITEN S.R.L
Pero, Milano (Italy)
Tel: +39 02 3394091