Type GHS/GHSA

JOHNSON-FLUITEN

Fluid	PSI (BAR)	Temperature °F (°C)	RPM
Coolant	1,160 (80)	195 (90)	32/42,000*
MQL	145 (10)	195 (90)	32/42,000*
Air	116 (8)	122 (50)	32/42,000*
Dry Run	-	-	32/42,000*

** with Ceramic Bearings*

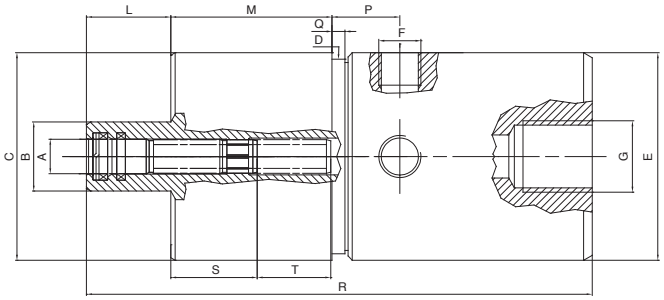

AXIAL INLET

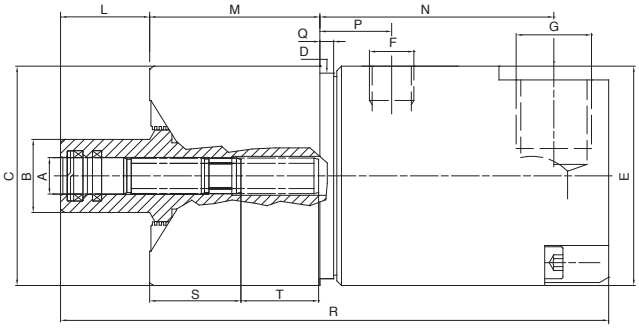

RADIAL INLET

Type	A	B	C	D	E	F	G	L	M	P	Q	R	S	T	Weight Lb (Kg)
GHS009039625	8 g6	16	48/h7	45	48	1/8" BSP	1/4" BSP	19.5	37.3	15.7	3	117	20	17	1.3 (0.60)

Type	A	B	C	D	E	F	G	L	M	P	Q	R	S	T	Weight Lb (Kg)
GHSA009039626	8 g6	16	48/h7	45	48	1/8" BSP	1/4" BSP	19.5	37.3	15.7	3	117	20	17	1.3 (0.60)

Dimensions in millimeters. For reference only and subject to change.

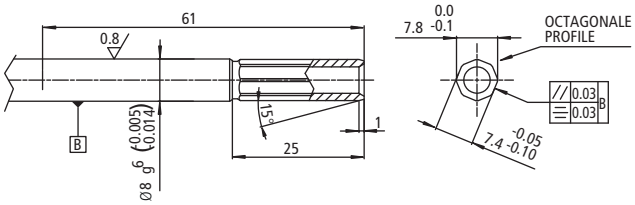

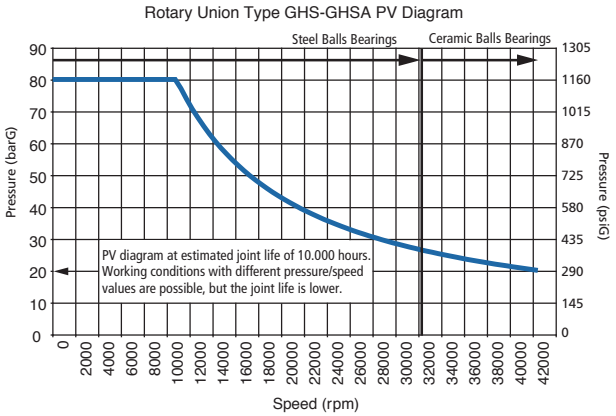

INSTALLATION INSTRUCTIONS

Overview

- Special seal design permits dry running
- Labyrinth seal and drain holes protect bearings
- Optimised seal balance ratio
- High precision angular contact bearings for high-speeds
- Anodised aluminium body
- Full flow area, minimal pressure drop
- Long drawbar stroke for maximum flexibility
- Seal to protect bearings for air pressure in rotor area
- Low heat generation in bearings and mechanical seal
- No leakage during tool change commutation
- Large drain holes to evacuate coolant from the union
- Supplied with bearings run-in upon request

JOHNSON-FLUITEN S.R.L
Pero, Milano (Italy)
Tel: +39 02 3394091